PARTS MANUAL

PART# 95050

TWO POST LIFTS

MODEL 9000A

MODEL 9000S

MODEL 9000F

MODEL 12000S

Ben Pearson

BAYMASTER

Fig. 1

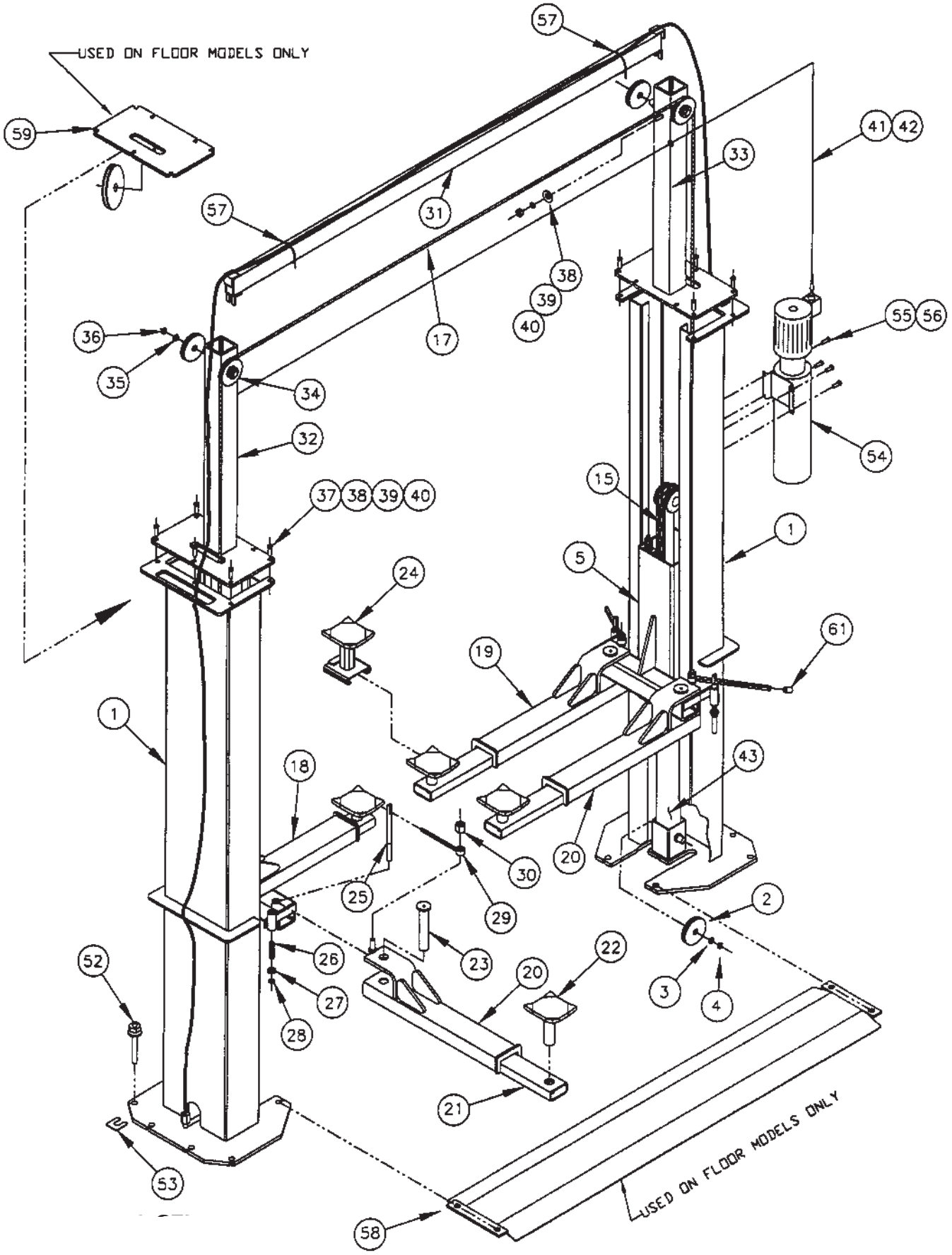
USED ON FLOOR MODELS ONLY
USED ON FLOOR MODELS ONLY
57
59
41
42
33
31
57
38
39
40
17
36
35
34
55
56
32
54
15
37
38
39
40
1
5
24
61
19
1
18
43
20
30
25
29
2
26
23
22
52
27
20
3
4
28
21
53
58

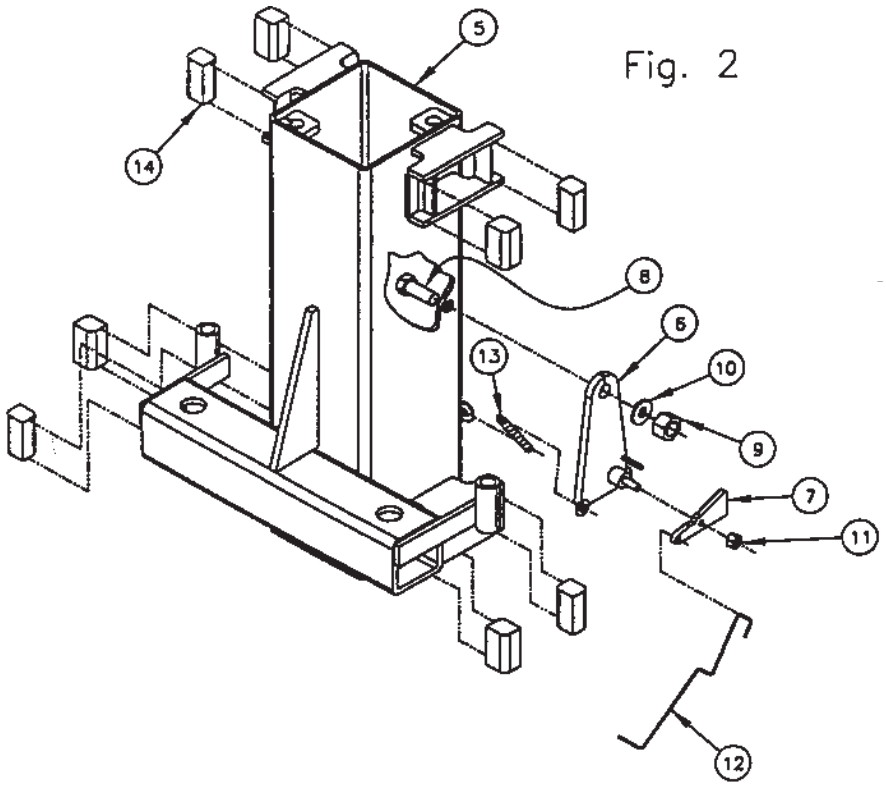
5
14
8
6
13
10
9
7
11
12

Fig. 2

Fig. 3

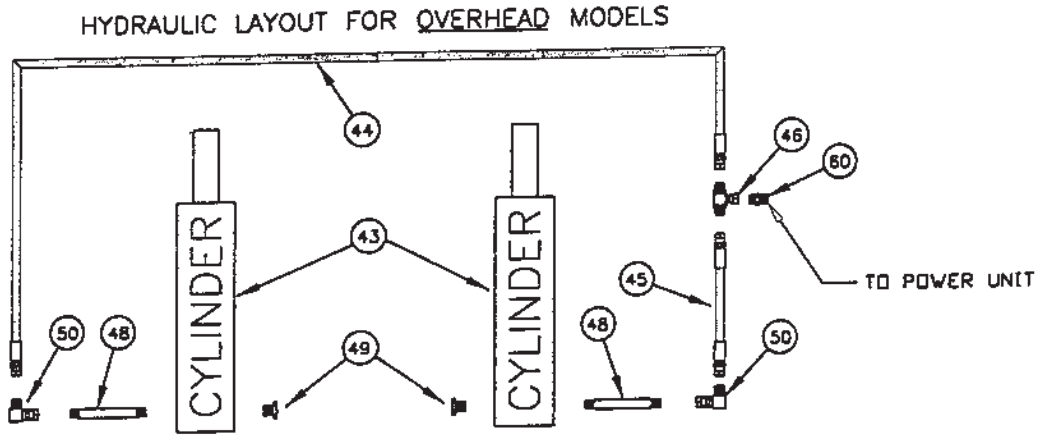
HYDRAULIC LAYOUT FOR OVERHEAD MODELS
44
46
60
43
CYLINDER
CYLINDER
45
TO POWER UNIT
50
48
49
48
50

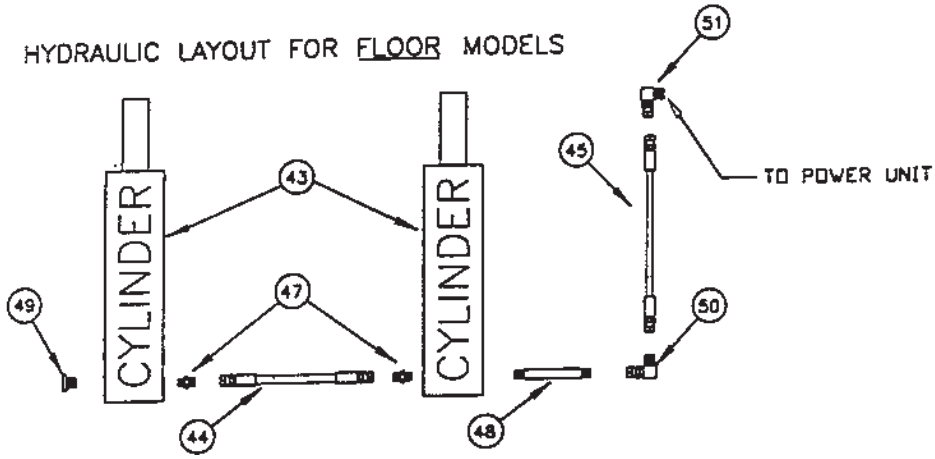
HYDRAULIC LAYOUT FOR FLOOR MODELS
51
45
TO POWER UNIT
43
CYLINDER
CYLINDER
49
47
50
44
48

PARTS LISTING 02/09/98

	BASE MODEL	9000A				9000S				9000F		12000S	
	LIFT PART NUMBER	90001		90027		90003		90028		90005		90006	
	OVERALL HEIGHT	12'-6"	QT	11'-6"	QT	12'-6"	QT	11'-6"	QT	9'-1"	QT	13'-6"	QT
#	POST ASSEMBLY	91000	2	91000	2	91000	2	91000	2	91012	2	91259	2
1	POST STRUCTURE	91001	1	91001	1	91001	1	91001	1	91001	1	91260	1
2	SHEAVE ASSEMBLY - LARGE	91014	1	91014	1	91014	1	91014	1	91014	2	91298	1
3	FLAT WASHER 1" SAE	100143	1	100143	1	100143	1	100143	1	100143	2	100143	1
4	SNAP RING 5100 - 1"	103001	1	103001	1	103001	1	103001	1	103001	2	103001	1
#	CARRIAGE ASSEMBLY	91017	2	91017	2	91017	2	91017	2	91255	2	91262	2
5	CARRIAGE STRUCTURE	91018	1	91018	1	91018	1	91018	1	91256	1	91263	1
6	SAFETY LATCH STRUCTURE	91030	1	91030	1	91030	1	91030	1	91030	1	91030	1
7	WIPE OUT - SAFETY LATCH	91032	1	91032	1	91032	1	91032	1	91032	1	91032	1
8	HEX SCREW 3/4 16NF X 2 GR. 5	101000	1	101000	1	101000	1	101000	1	101000	1	101000	1
9	NYLON NUT 3/4-16NF	101001	1	101001	1	101001	1	101001	1	101001	1	101001	1
10	FLAT WASHER 3/4" SAE	100512	2	100512	2	100512	2	100512	2	100512	2	100512	2
11	LOCK NUT 3/8-18 NC	100083	1	100083	1	100083	1	100083	1	100083	1	100083	1
12	SAFETY RELEASE HANDLE	91091	1	91091	1	91091	1	91091	1	91091	1	91091	1
13	SAFETY SPRING - CARRIAGE	103004	1	103004	1	103004	1	103004	1	103004	1	103004	1
14	RUB BLOCK	91033	16	91033	16	91033	16	91033	16	91033	16	91230	16
15	CHAIN ASSEMBLY	91034	2	91034	2	91034	2	91034	2	91034	2	91266	2
#	CHAIN	91035	1	91035	1	91035	1	91035	1	91035	1	91223	1
#	MASTER LINK	91036	2	91036	2	91036	2	91036	2	91036	2	91227	2
17	CABLE ASSEMBLY	91040	2	91362	2	91040	2	91362	2	91231	2	91267	2
#	CABLE STRUCTURE	91041	1	91363	1	91041	1	91363	1	91232	1	91268	1
#	FLAT WASHER 3/4" SAE	100512	2	100512	2	100512	2	100512	2	100512	1	100512	14
#	NYLON NUT 3/4 -16NF	101001	2	101001	2	101001	2	101001	2	101001	2	101001	2
18	ARM STRUCTURE LH FRONT	91043	1	91043	1	91098	1	91098	1	91098	1	91270	1
19	ARM STRUCTURE RH FRONT	91044	1	91044	1	91098	1	91098	1	91098	1	91270	1
20	ARM STRUCTURE REAR	91050	2	91050	2	91098	2	91098	2	91098	2	91270	2
21	ARM EXTENSION STRUCTURE	91054	4	91054	4	91054	4	91054	4	91054	4	91274	4
22	LIFT PAD ASSEMBLY	91058	4	91058	4	91058	4	91058	4	91058	4	N/A	
#	LIFT PAD STRUCTURE	91059	1	91059	1	91059	1	91059	1	91059	1	91278	4
#	RUBBER PAD	91062	1	91062	1	91062	1	91062	1	91062	1	N/A	
#	SCREW (SPECIAL)	101004	2	101004	2	101004	2	101004	2	101004	2	N/A	
#	HEX NUT 1/4 X 20NC	100131	2	100131	2	100131	2	100131	2	100131	2	N/A	
#	1/4" FLAT WASHER SAE	100065	2	100065	2	100065	2	100065	2	100065	2	N/A	
23	ARM PIN STRUCTURE	91063	4	91063	4	91063	4	91063	4	91063	4	91280	4
24	LIFT PAD EXTENSION ASSEMBLY - 6"	91092	4	91092	4	91092	4	91092	4	91092	4	91092	4
#	LIFT PAD EXTENSION STRUCTURE	91093	1	91093	1	91093	1	91093	1	91093	1	91093	1
#	RUBBER PAD	91062	1	91062	1	91062	1	91062	1	91062	1	91062	1
#	SCREW (SPECIAL)	101004	2	101004	2	101004	2	101004	2	101004	2	101004	2
#	HEX NUT 1/4 X 20NC	100131	2	100131	2	100131	2	100131	2	100131	2	100131	2
#	1/4" FLAT WASHER SAE	100065	2	100065	2	100065	2	100065	2	100065	2	100065	2
	(OPTIONAL)												
	LIFT PAD EXTENSION ASSEMBLY - 4"	91390	4	91390	4	91390	4	91390	4	91390	4	91390	4
	SAME AS 91092 EXCEPT STRUCTURE IS 9139												
#	ARM RESTRAINT KIT	91065	4	91065	4	91065	4	91065	4	91065	4	91412	4
25	PIN STR - ARM RESTRAINT	91066	1	91066	1	91066	1	91066	1	91066	1	91413	1
26	SPRING - ARM RESTRAINT	103002	1	103002	1	103002	1	103002	1	103002	1	103002	1
27	FLAT WASHER 3/4" SAE	100512	1	100512	1	100512	1	100512	1	100512	1	100512	1
28	"E" CLIP - 3/4"	103005	1	103005	1	103005	1	103005	1	103005	1	103005	1
29	BAR STRUCTURE - ARM RESTRAINT	91069	1	91069	1	91069	1	91069	1	91069	1	91069	1
30	NYLON NUT 3/4-16NF	101001	1	101001	1	101001	1	101001	1	101001	1	101001	1
61	PLASTIC PROTECTOR CAP	101021	4	101021	4	101021	4	101021	4	101021	4	101021	4

	BASE MODEL	9000A				9000S				9000F		12000S	
	LIFT PART NUMBER	90001		90027		90003		90028		90005		90006	
	OVERALL HEIGHT	12'-6"	QT	11'-6"	QT	12'-6"	QT	11'-6"	QT	9'-1"	QT	13'-6"	QT
31	CROSSOVER STRUCTURE	91073	1	91073	1	91073	1	91073	1	N/A		91283	1
#	LH POST EXTENSION ASSEMBLY	91077	1	91368	1	91100	2	91364	2	N/A		91285	2
	32 POST EXT. STRUCTURE	91079	1	91369	1	91101	1	91365	1	N/A		91286	1
	34 SHEAVE ASSEMBLY - SMALL	91083	2	91083	2	91083	2	91083	2	N/A		91083	2
	35 FLAT WASHER 1" SAE	100143	2	100143	2	100143	2	100143	2	N/A		100143	2
	36 SNAP RING 5100-1"	103001	2	103001	2	103001	2	103001	2	N/A		103001	2
	38 FLATWASHER 1/2"	100152	1	100152	1	100152	1	100152	1	N/A		100152	1
	39 LOCKWASHER 1/2"	100125	1	100125	1	100125	1	100125	1	N/A		100125	1
	40 HEX NUT 1/2-13NC	100124	1	100124	1	100124	1	100124	1	N/A		100124	1
#	RH POST EXTENSION ASSEMBLY	91078	1	91370	1	91100	2	91364	2	N/A		91285	2
	33 POST EXT. STRUCTURE	91080	1	91371	1	91101	1	91365	1	N/A		91286	1
	34 SHEAVE ASSEMBLY - SMALL	91083	2	91083	2	91083	2	91083	2	N/A		91083	2
	35 FLAT WASHER 1" SAE	100143	2	100143	2	100143	2	100143	2	N/A		100143	2
	36 SNAP RING 5100-1"	103001	2	103001	2	103001	2	103001	2	N/A		103001	2
	38 FLATWASHER 1/2"	100152	1	100152	1	100152	1	100152	1	N/A		100152	1
	39 LOCKWASHER 1/2"	100125	1	100125	1	100125	1	100125	1	N/A		100125	1
	40 HEX NUT 1/2-13NC	100124	1	100124	1	100124	1	100124	1	N/A		100124	1
37	HEX SCREW 1/2 X 13NC X 2 GR. 5	100016	10	100016	10	100016	10	100016	10	100016	10	100016	10
38	FLAT WASHER 1/2"	100152	20	100152	20	100152	20	100152	20	100152	20	100152	20
39	LOCKWASHER 1/2"	100125	10	100125	10	100125	10	100125	10	100125	10	100125	10
40	HEX NUT 1/2-13NC	100124	10	100124	10	100124	10	100124	10	100124	10	100124	10
41	SHUT OFF CABLE	91085	1	91085	1	91085	1	91085	1	N/A		91375	1
42	CABLE CLAMP - SHUT OFF	91086	4	91086	4	91086	4	91086	4	N/A		91086	4
43	CYLINDER ASSEMBLY	91454	2	91454	2	91454	2	91454	2	91454	2	91474	2
44	HYD HOSE 3/8 X 345"	91089	1	91367	1	91089	1	91367	1	91172	1	91290	1
45	HYD HOSE 3/8 X 67"	91090	1	91090	1	91090	1	91090	1	91090	1	91090	1
46	SWIVEL TEE 9/16 X 9/16JIC	105020	1	105020	1	105020	1	105020	1	N/A		105020	1
47	ADAPTER-STRAIGHT 3/8NPT X 9/16JIC	N/A		N/A		N/A		N/A		60052	2	N/A	
48	PIPE NIPPLE 3/8 X 6"	105001	2	105001	2	105001	2	105001	2	105001	1	105001	2
49	PIPE PLUG 3/8" NPT	105002	2	105002	2	105002	2	105002	2	105002	1	105002	2
50	ELBOW 3/8 FEMALE NPT - 9/16 JIC	105003	2	105003	2	105003	2	105003	2	105003	1	105003	2
51	90 DEG. ELBOW-LG 9/16ORB-9/16JIC	N/A		N/A		N/A		N/A		61362	1	N/A	
60	ADAPTER 9/16ORB X 9/16JIC	60544	1	60544	1	60544	1	60544	1	N/A		60544	1
52	ANCHOR BOLT 3/4 X 4-3/4"	95000	10	95000	10	95000	12	95000	12	95000	12	95000	12
53	SHIMS	95001	24	95001	24	95001	24	95001	24	95001	24	95001	24
54	POWER UNIT - O/H 1PHASE 220V	95010	1	95010	1	95010	1	95010	1	95013	1	95010	1
55	HHFL SCREW 5/16 X 18NC X 3/4 GR. 5	100234	4	100234	4	100234	4	100234	4	100234	4	100234	4
56	HH FL NUT 5/16 X 18NC	100237	4	100237	4	100237	4	100237	4	100237	4	100237	4
57	PLASTIC TIE	103015	2	103015	2	103015	2	103015	2	N/A		103015	2
58	FLOOR COVER STRUCTURE	N/A		N/A		N/A		N/A		91103	1	N/A	
59	TOP PLATE ASSEMBLY	N/A		N/A		N/A		N/A		91107	2	N/A	
	# TOP PLATE STRUCTURE	N/A		N/A		N/A		N/A		91108	1	N/A	
	# SHEAVE ASSEMBLY - LARGE	N/A		N/A		N/A		N/A		91014	1	N/A	
	# FLATWASHER 1" SAE	N/A		N/A		N/A		N/A		100143	1	N/A	
	# SNAP RING 5100-1"	N/A		N/A		N/A		N/A		103001	1	N/A	
#	NAME PLATE	62249	1	62249	1	62249	1	62249	1	62249	1	62249	1
#	BAYMASTER DECAL 5X36 MYLAR	95004	1	95004	1	95004	1	95004	1	95004	1	95004	1
#	BEN PEARSON DECAL 5X36 MYLAR	95005	1	95005	1	95005	1	95005	1	95005	1	95005	1
#	PB/800 DECAL 2X5 MYLAR	95006	1	95006	1	95006	1	95006	1	95006	1	95006	1
#	CAUTION DECAL - WEIGHT	95007	2	95007	2	95007	2	95007	2	95007	2	95007	2
#	BLUE TOUCH-UP PAINT (12OZ.) SPRAY	103007	1	103007	1	103007	1	103007	1	103007	1	103007	1
#	YELLOW TOUCH-UP PAINT (12OZ.) SPRAY	103008	1	103008	1	103008	1	103008	1	103008	1	103008	1
#	WARRANTY CARD	83423	1	83423	1	83423	1	83423	1	83423	1	83423	1
#	MANUAL	95050	1	95050	1	95050	1	95050	1	95050	1	95050	1
	# PART NOT SHOWN												