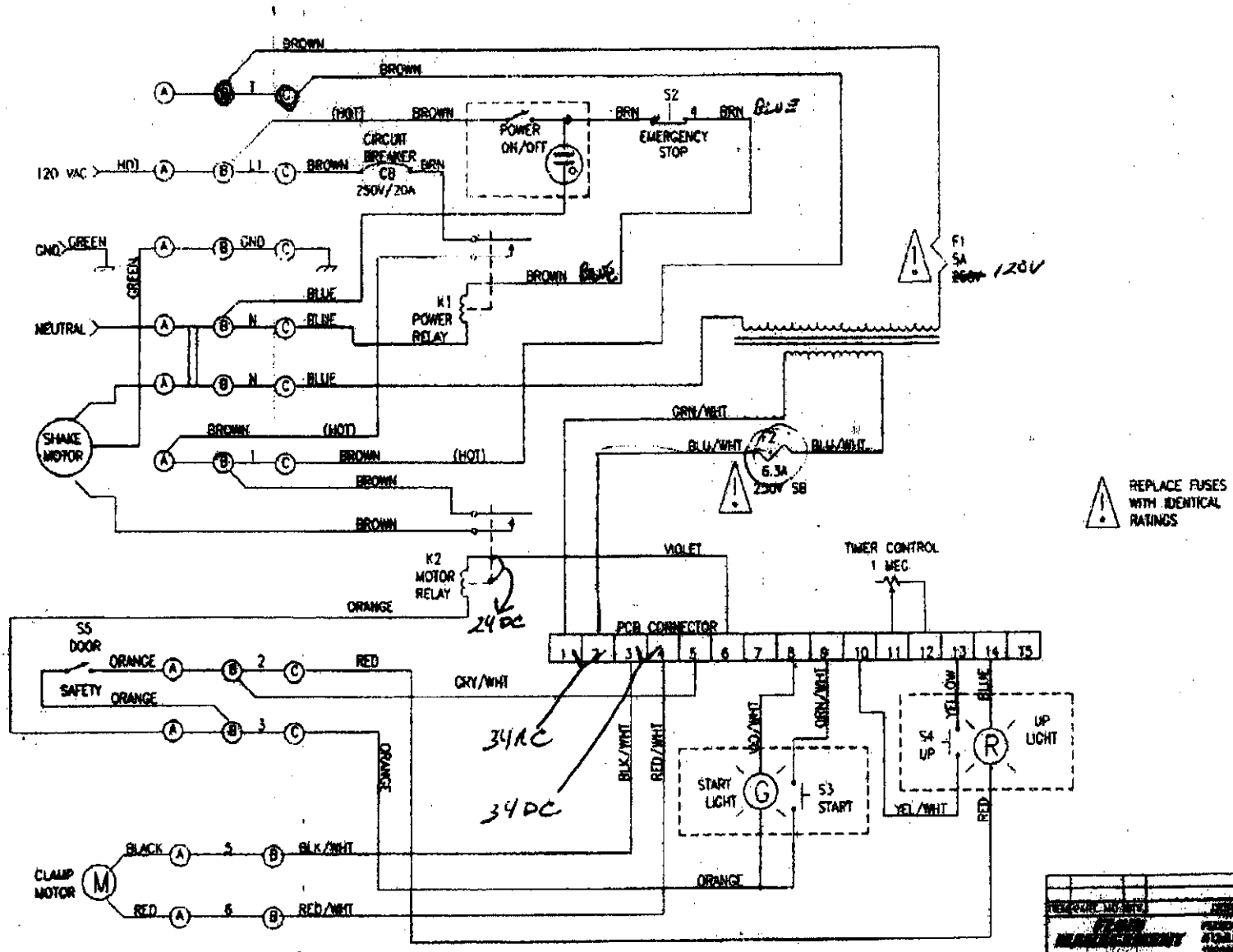
120 VAC
HOT
GND
GREEN
NEUTRAL
BROWN
(HOT)
CIRCUIT BREAKER
CB
250V/20A
POWER ON/OFF
S2
EMERGENCY STOP
BRN
BLUE
K1 POWER RELAY
F1
5A
120V
SHAKE MOTOR
GRN/WHT
BLU/WHT
F2
6.3A
250V
SB
REPLACE FUSES WITH IDENTICAL RATINGS
K2 MOTOR RELAY
VIOLET
ORANGE
24DC
TIMER CONTROL
1 MEC
PCB CONNECTOR
S5 DOOR
SAFETY
RED
GRY/WHT
34AC
34DC
BLK/WHT
RED/WHT
START LIGHT
S3 START
YELLOW
S4 UP
UP LIGHT
YEL/WHT
CLAMP MOTOR
BLACK
RED